M-12710 | 1

NOTE: #10-32 X 7/16 LG. SCREWS PROVIDED

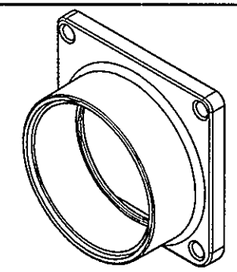

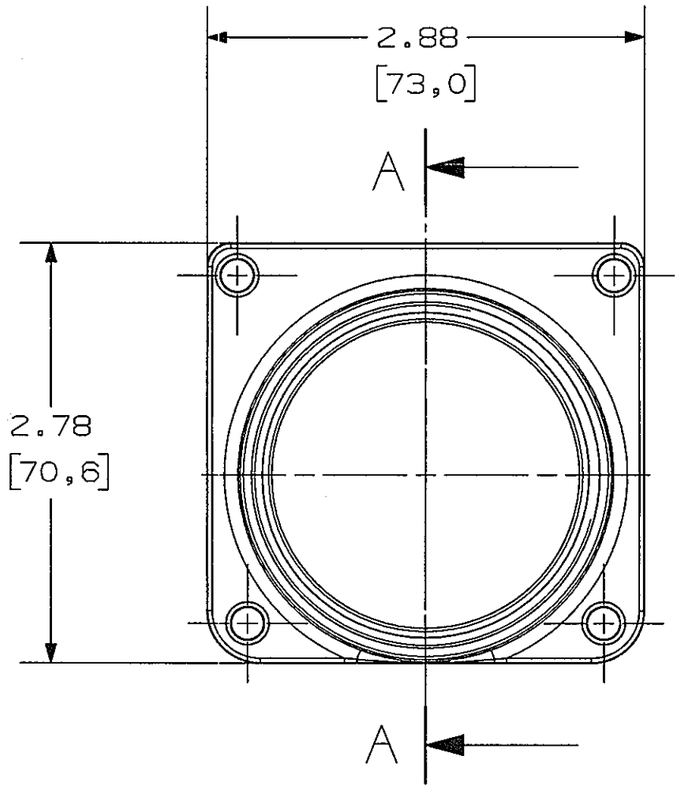


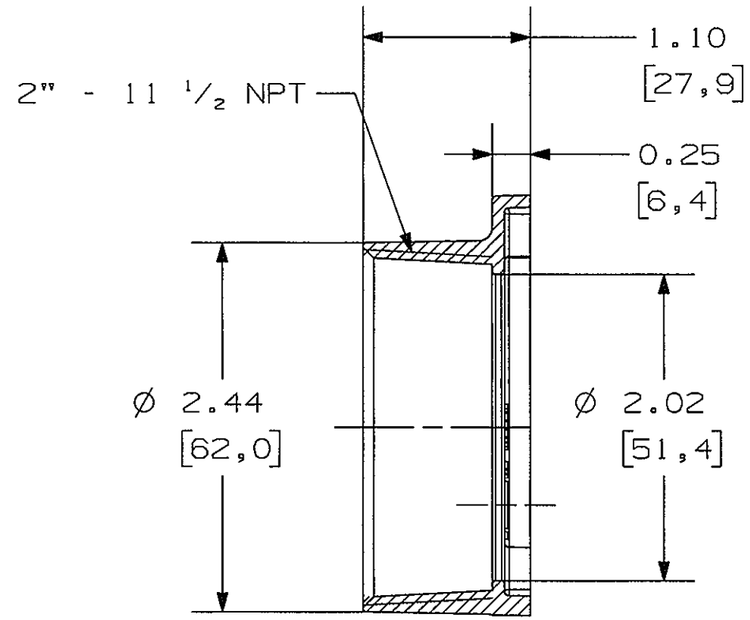


SECTION A-A

NOTES: UNLESS OTHERWISE SPECIFIED:

1. DIMENSIONS SHOWN ON THIS DRAWING ARE NOMINAL VALUES FOR GENERAL USE ONLY. ACTUAL PART TOLERANCES MUST BE OBTAINED FROM HUBBELL ENGINEERING.
2. PRODUCT IS cULus LISTED.
3. DIMENSIONS ARE IN INCHES [ mm ].

CATALOG NO. CFBHUB2
2" HUB FOR USE WITH
CFB2G30, CFB2G30CR, CFB2G30R, CFB2G30RCR, CFB4G30, CFB4G30CR, CFB4G30R, CFB4G30RCR, CFB6G30, CFB6G30CR, CFB6G30R, AND CFB6G30RCR SERIES FLOOR BOXES.

LIST OF PARTS

| DESCRIPTION | MATERIAL | FINISH |
|---|---|---|
| HUB | ALUM | |
| SCREWS | STEEL | ZINC PL. |

| SYM | REVISIONS | APP | DATE |
|---|---|---|---|
| 1 | 9/23/14 RELEASE FOR PRODUCTION PER DCN 20800 CAC TLS | CAC | |

THE DESIGN AND DIMENSIONS OF THE PRODUCT SHOWN ON THIS DRAWING ARE SUBJECT TO CHANGE WITHOUT NOTICE

TITLE
HUB METALLIC THREADED 2" NPT

TOLERANCES UNLESS OTHERWISE SPECIFIED
.XX = ±.01
.XXX = ±.005
ANGLES = ±2°

WIRING DEVICE-KELLEMS
HUBBELL INCORPORATED
SHELTON, CT

DR. BY CAC | APP. BY
TR. BY | SCALE 1:1
CHK. BY | DATE 09/23/14

DIMENSION SHEET FOR CAT. NO. CFBHUB2

REPAIRABLE ☒ NON-REPAIRABLE ☐

B

M-12710

1

CODE 74545